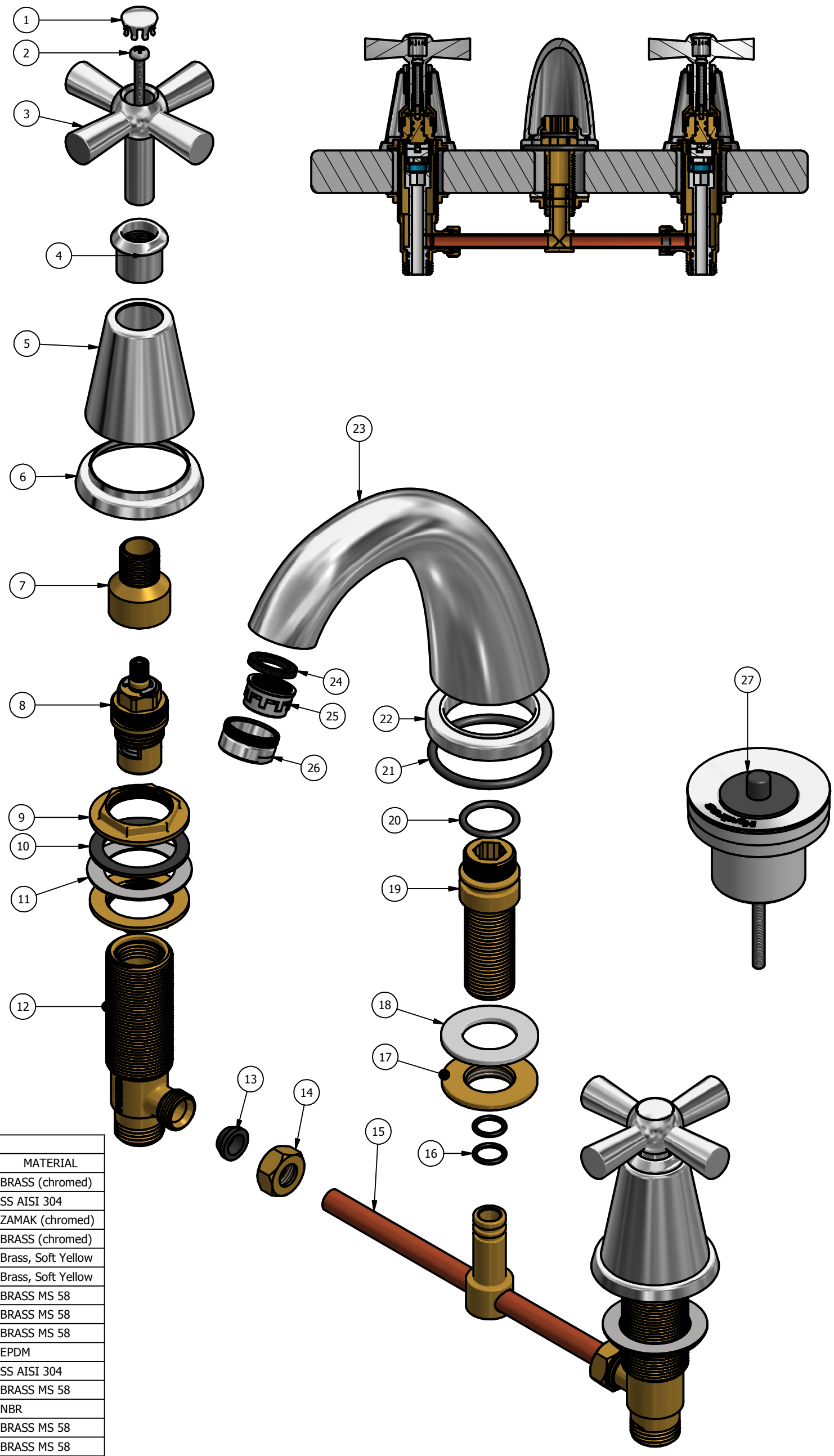

PARTS LIST			
ITEM	QTY	DESCRIPTION	MATERIAL
1	2	LUCCA HANDLE TOP	BRASS (chromed)
2	2	M4 SCREW	SS AISI 304
3	2	TOSCANA SERIES HANDLE	ZAMAK (chromed)
4	2	G 3/8 COVER BUSHING	BRASS (chromed)
5	2	TOSCANA COVER	Brass, Soft Yellow
6	2	TOSCANA COVER BASE	Brass, Soft Yellow
7	2	M24 TO G3/8" BUSHING	BRASS MS 58
8	2	1/2" CERAMIC HEADWORK	BRASS MS 58
9	2	M28 BRASS NUT	BRASS MS 58
10	2	RUBBER WASHER	EPDM
11	2	STAINLESS STEEL WASHER	SS AISI 304
12	2	ASSEMBLED VALVE M28	BRASS MS 58
13	2	RUBBER SEAL	NBR
14	2	3/8" NUT	BRASS MS 58
15	1	"T" CONNECTION TUBE	BRASS MS 58
16	2	"T" CONNECTION O-RING	NBR
17	1	1/2" SPOUT NUT	BRASS MS 58
18	1	SPOUT FIXATION WASHER	POM (white)
19	1	SPOUT CONNECTOR	BRASS MS 58
20	1	SPOUT O-RING (Parker 2-117)	NBR
21	1	O-Ring	Rubber
22	1	SPOUT BASE	ABS (chromed)
23	1	TOSCANA SERIES SPOUT	Brass, Soft Yellow
24	1	NOZZLE WASHER	EPDM
25	1	PLASTIC AERATOR	PLASTIC
26	1	M24 NOZZLE HOLDER	BRASS (chromed)
27	1	ASSEMBLED DRAIN	----------

Designed by	Checked by	Approved by	Date	Date
F.WYDLER		G.Aguilar		10/12/2014

SPECIFICATIONS

Lin. Tol.: +-0.5
Ang. Tol.: +-30´
Rough: 32

TOSCANA SERIES LAVATORY SET

314411

Edition

Sheet 1 / 1